KA 006 LG

Junction box 86x44x41mm, plastic, RAL 7035

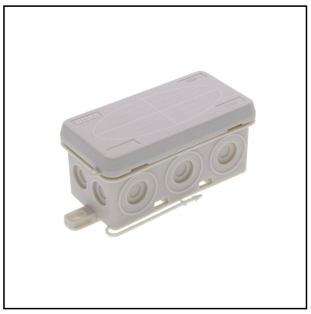

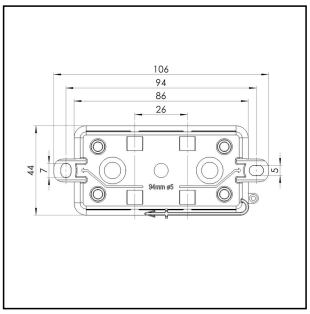

Products may differ in size, colour and appearance to those shown. If you require further information or customisation, please contact us directly.

Material	Polyethylene / Polypropylene
Protection class	IP55
Temp. range min	-30 °C
Temp. range max	60 °C
Temperatures during install.	-5 °C - 60 °C
Glow wire test	750 °C
Voltage	400 V
Rated cross section	1,5 mm²
Fixing	2 external mounting feet
Ø cable diameter min	7 mm
Ø cable diameter max	12 mm
External dimensions LxWxH	86 x 44 x 41 mm
Using for cable gland	
Product Color	RAL 7035
Order no. RAL 7035	10109426
Type	KA 006 LG
Packing unit	10
EAN number	4007686094688
Tariff number	39269097
ETIM-Classification	EC002600

Remarks:

Fixture: with cable ties, 2 external mounting feet

Equipment: 10 self-sealing, cutable cable entries at the side,

2 on the bottom

captive cover

Your Contact:
WISKA Hoppmann GmbH
Kisdorfer Weg 28 · 24568 Kaltenkirchen · Germany
☎ +49-4191-508-0 · 🖷 +49-4191-508-209
contact@wiska.de · www.wiska.com

Other technical data on request / subject to change without notice

Recommended accessories

ZER 4-12 LG	10109800
ESD 30 LG	10109875
ESV LG	10109876
EDV LG	10109877
ZER 11-18 LG	10110766
SP-KT 11/5 Terminal block	22000409

12.08.2026

Your Contact:
WISKA Hoppmann GmbH
Kisdorfer Weg 28 · 24568 Kaltenkirchen · Germany
☎ +49-4191-508-0 · 🖷 +49-4191-508-209
contact@wiska.de · www.wiska.com

Other technical data on request / subject to change without notice

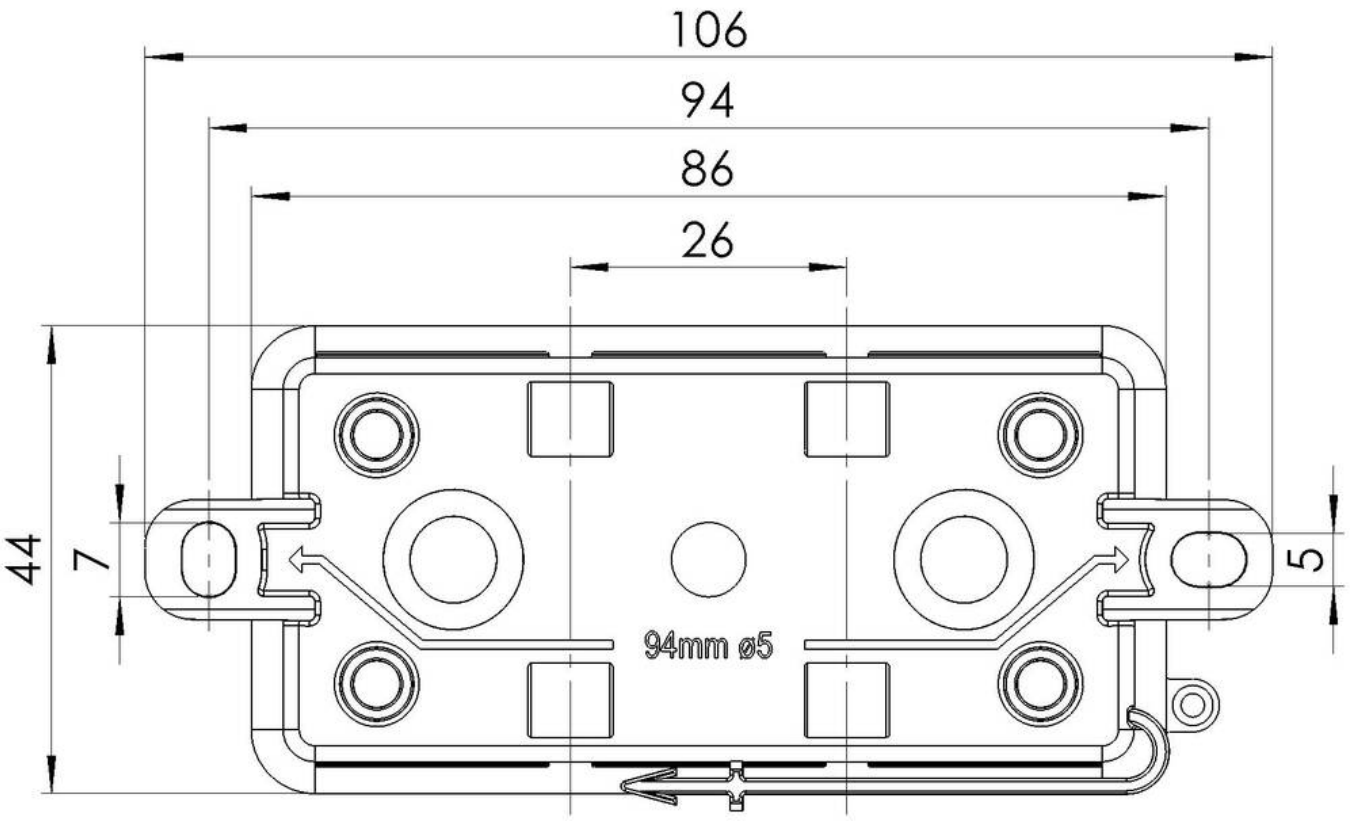

Your Contact:
WISKA Hoppmann GmbH
Kisdorfer Weg 28 · 24568 Kaltenkirchen · Germany
☎ +49-4191-508-0 · 🖷 +49-4191-508-209
contact@wiska.de · www.wiska.com

Other technical data on request / subject to change without notice